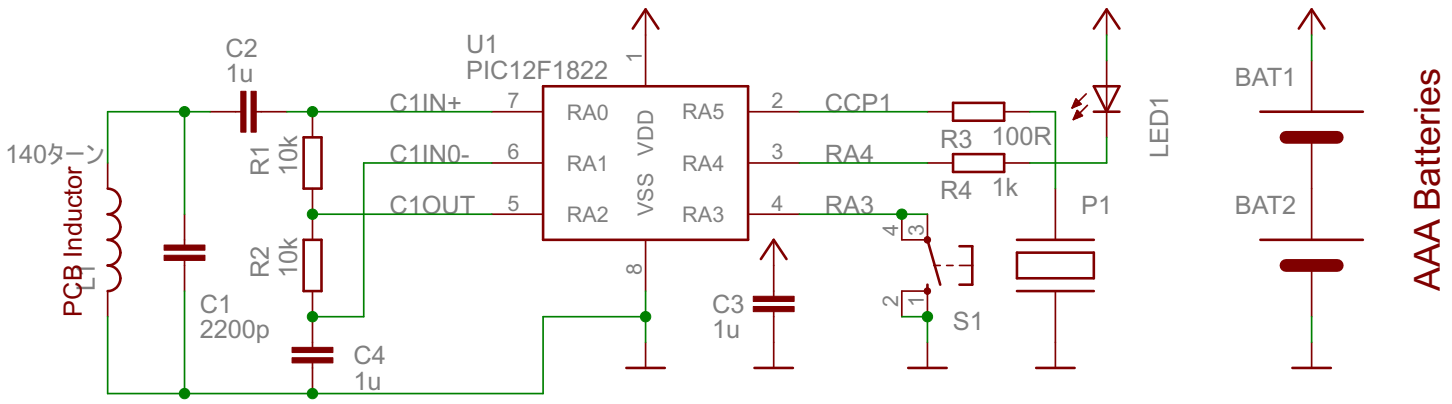

METAL DETECTOR R1
ARaHiSi

http://arahisi.com

AR-MDTC-001

2015/03/11 14:03:50

Sheet: 1/1

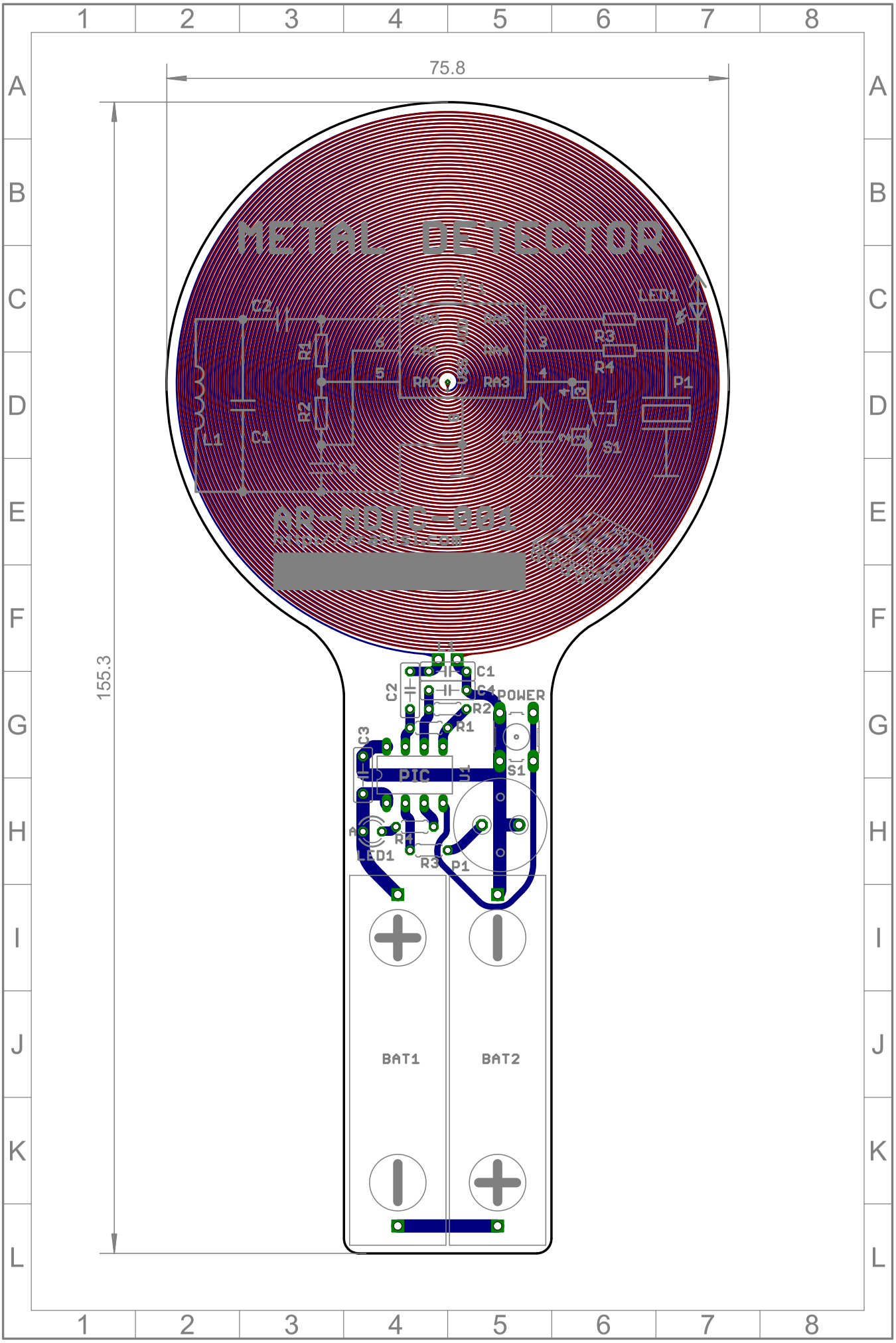
75.8
155.3
METAL DETECTOR
AR-MIC-001
C1
C2
C3
C4
POWER
R1
R2
R3
R4
R5
P1
S1
LED1
PIC
BAT1
BAT2